1. Fluorescence color sensor type SPECTRO-3-30-BL/OR-CL
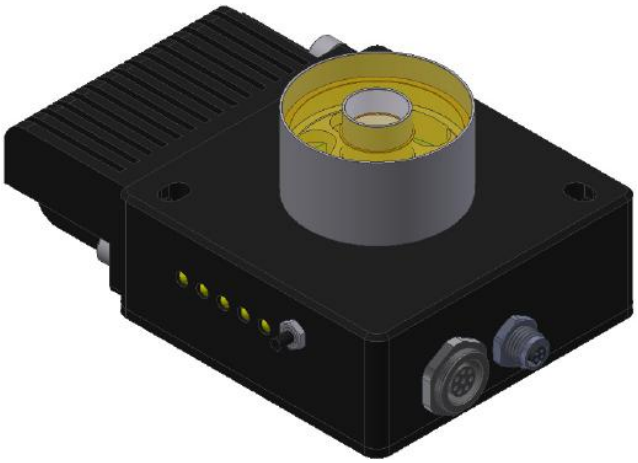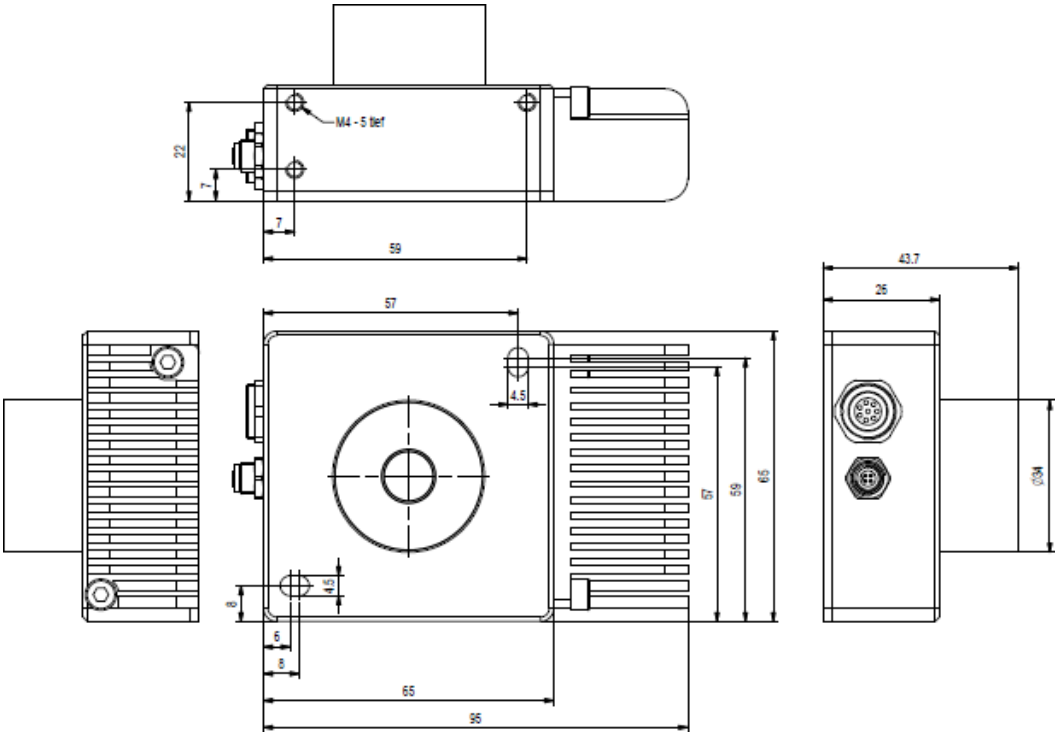
The fluorescence color sensor **SPECTRO-3-30-BL/OR-CL** is using blue LEDs. The blue light will be converted from a suitable object into the visible wavelength range above the yellow range. Normally the efficiency of the fluorescence material is very weak, thus a high amplification with a strong optical filtering is required from the sensor side. Due to the power consumption of the bright blue LEDs, a side heat sink is provided.